ENGR 212 – Laboratory 8 (Formal Lab Report)

Difference Amplifier

OBJECTIVES:

To study an operational amplifier and a difference amplifier circuit by:

- Completing the analysis of the circuit, and selecting resistors that satisfy design specifications.
- Implementing the circuit in an experimental setting, taking measurements and comparing its performance with theoretical results.

MATERIALS:

- Laboratory setup, including breadboard
- LM324 operational amplifier
- Several wires and resistors of varying sizes

PART 1: DESIGN AND ANALYSIS

Consider the circuit shown:

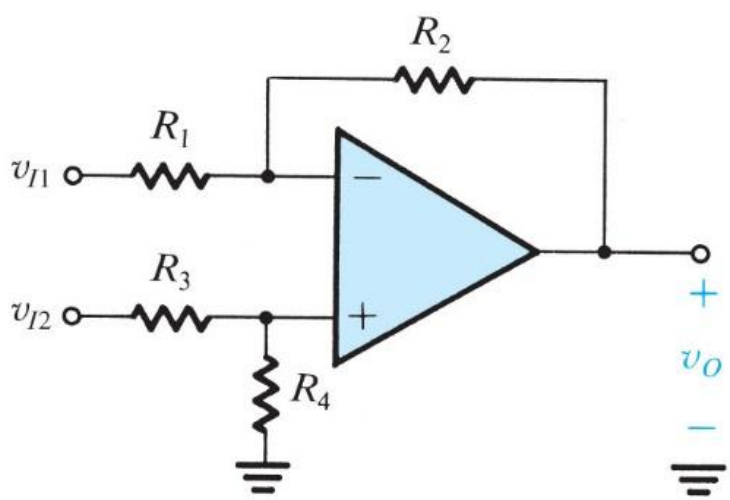

Design the circuit such that the gain is 10 V/V. Select resistor values such that $R_1 + R_3 = 2k\Omega$. Use supplies (to power V_{CC} and V_{EE}) of $V_+ = 15V$ and $V_- = -15$ V. In terms of the two input voltages, v_o is

$$v_o = -\frac{R_2}{R_1}v_{I1} + \frac{1 + R_2/R_1}{1 + R_3/R_4}v_{I2}$$

With the constraint that

$$\frac{R_2}{R_1} = \frac{R_4}{R_3}$$

the output voltage becomes

$$v_0 = \frac{R_2}{R_1}(v_{I2} - v_{I1})$$

and thus the circuit acts as a differential amplifier with a gain of

$$A_d = \frac{R_2}{R_1}$$

Hand Calculations

- Sketch the circuit in your lab notes, clearly labeling the op-amp terminals.
- What values of R_1, R_2, R_3 and R_4 do you need to meet the design specifications?

PART 1: PROTOTYPING AND MEASUREMENT

- Using a digital multimeter, measure all resistors to three significant digits.
- Assemble the circuit onto a breadboard.
- Using a digital multimeter, measure the DC voltages at each terminal (inverting terminal, noninverting terminal and output terminal of the op amp). Leave both inputs v_{I1} and v_{I2} grounded.
- While leaving v_{I2} grounded, provide a DC input to v_{I1} in increments of 0.1 V, from 0 to 1 V. Record the values of v_o and **plot your results**.
- While leaving v_{I1} grounded, provide a DC input to v_{I2} in increments of 0.1 V, from 0 to 1 V. Record the values of v_o and **plot your results**.
- Using a function generator, provide a 1-kHz 50-$mV_{pk\text{-}pk}$ sine wave to input v_{I1} and ground input v_{I2}. Using an oscilloscope, capture the output voltage waveform. What is the gain?
- Using a function generator, provide a 1-kHz 50-$mV_{pk\text{-}pk}$ sine wave to input v_{I2} and ground input v_{I1}. Using an oscilloscope, capture the output voltage waveform. What is the gain?

PART 2: POST-MEASUREMENT EXERCISE

- Calculate the value of gain obtained in your measurement. Explain any discrepancies between the experiment and hand analysis.
- Recalculate the theoretical gains of the circuit, using the measured resistor values. Are the recalculated values closer to your measured gains?

Note: If you are using the **33120A** function generator or the **33220A** function generator:

1. In order to display the waveform correctly on the oscilloscope, the output impedance from the function generator must match the input impedance of the oscilloscope. This can be accomplished by setting the impedance of the function generator to "High Impedance" as described in the following:
   a. For **33120A** function generator:
      i. Push "Shift" then "Menu".
      ii. Push "<" or ">" button to get "D: SYS MENU".
      iii. Push "∧" or "∨" button to get "50 OHM".
      iv. Push "<" or ">" button to get "HIGH Z".
      v. Push "Enter".
   b. For **33220A** function generator:
      i. Push "Utility" and select "Output Setup".
      ii. Select "High Z" and then Push "Done".

LM324, LM324A, LM224, LM2902, LM2902V, NCV2902

Single Supply Quad Operational Amplifiers

The LM324 series are low–cost, quad operational amplifiers with true differential inputs. They have several distinct advantages over standard operational amplifier types in single supply applications. The quad amplifier can operate at supply voltages as low as 3.0 V or as high as 32 V with quiescent currents about one–fifth of those associated with the MC1741 (on a per amplifier basis). The common mode input range includes the negative supply, thereby eliminating the necessity for external biasing components in many applications. The output voltage range also includes the negative power supply voltage.

- Short Circuited Protected Outputs
- True Differential Input Stage
- Single Supply Operation: 3.0 V to 32 V (LM224, LM324, LM324A)
- Low Input Bias Currents: 100 nA Maximum (LM324A)
- Four Amplifiers Per Package
- Internally Compensated
- Common Mode Range Extends to Negative Supply
- Industry Standard Pinouts
- ESD Clamps on the Inputs Increase Ruggedness without Affecting Device Operation

MAXIMUM RATINGS (T_A = +25°C, unless otherwise noted.)

Rating	Symbol	LM224 LM324, LM324A	LM2902, LM2902V	Unit
Power Supply Voltages Single Supply Split Supplies	 V_{CC} V_{CC}, V_{EE}	 32 ±16	 26 ±13	Vdc
Input Differential Voltage Range (Note 1)	V_{IDR}	±32	±26	Vdc
Input Common Mode Voltage Range	V_{ICR}	–0.3 to 32	–0.3 to 26	Vdc
Output Short Circuit Duration	t_{SC}	Continuous		
Junction Temperature	T_J	150		°C
Storage Temperature Range	T_{stg}	–65 to +150		°C
Operating Ambient Temperature Range	T_A			°C
LM224		–25 to +85		
LM324, 324A		0 to +70		
LM2902			–40 to +105	
LM2902V, NCV2902			–40 to +125	

1. Split Power Supplies.

ON Semiconductor®

http://onsemi.com

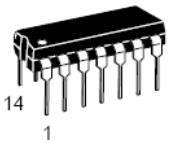

PDIP–14
N SUFFIX
CASE 646

SO–14
D SUFFIX
CASE 751A

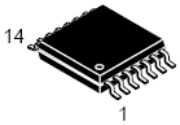

TSSOP–14
DTB SUFFIX
CASE 948G

PIN CONNECTIONS

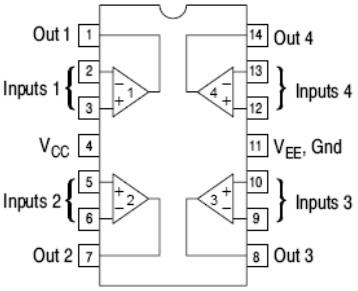

(Top View)

ORDERING INFORMATION

See detailed ordering and shipping information in the package dimensions section on page 9 of this data sheet.

DEVICE MARKING INFORMATION

See general marking information in the device marking section on page 10 of this data sheet.